BLUE AURA

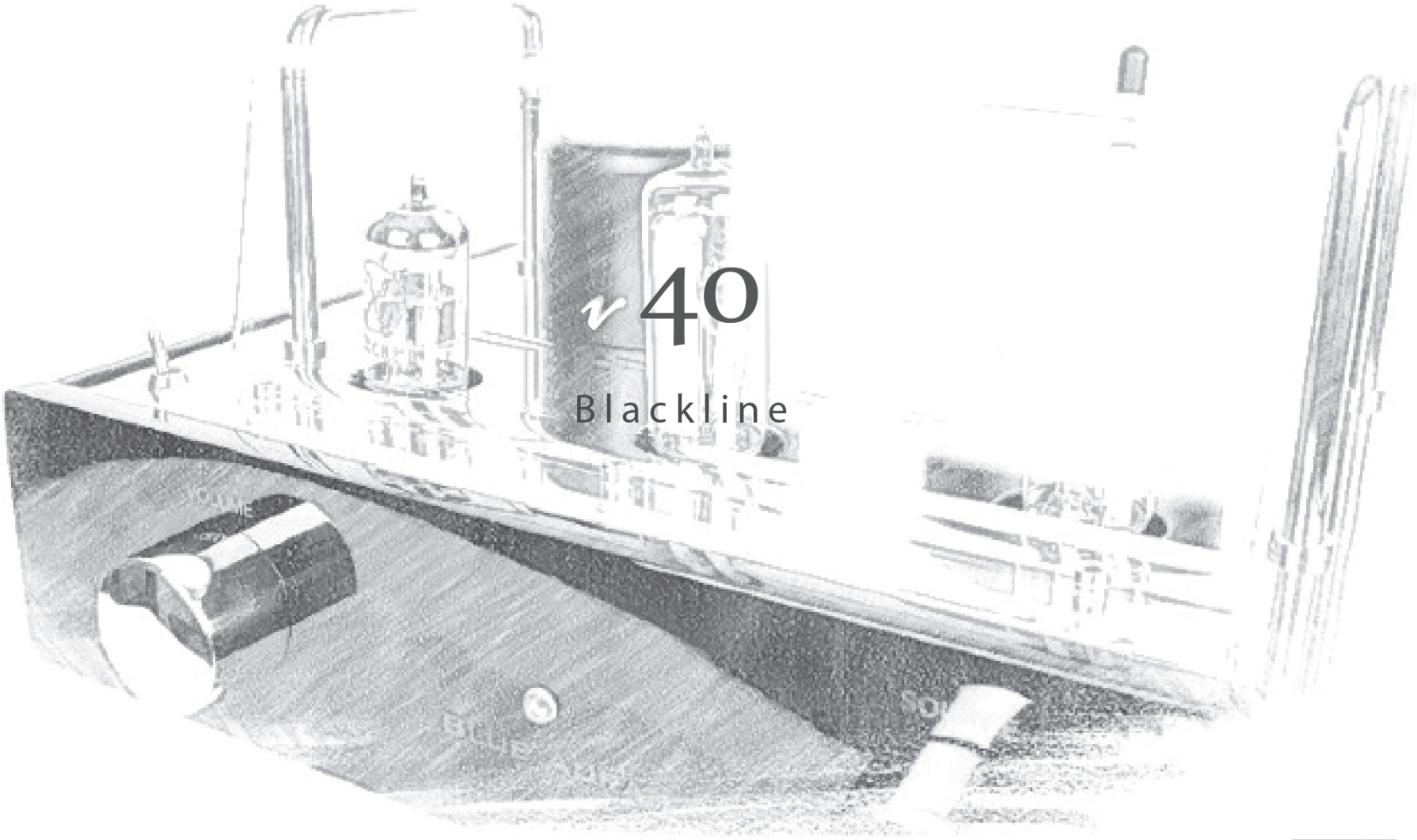

v40

Blackline

Bluetooth®

apt X CSR

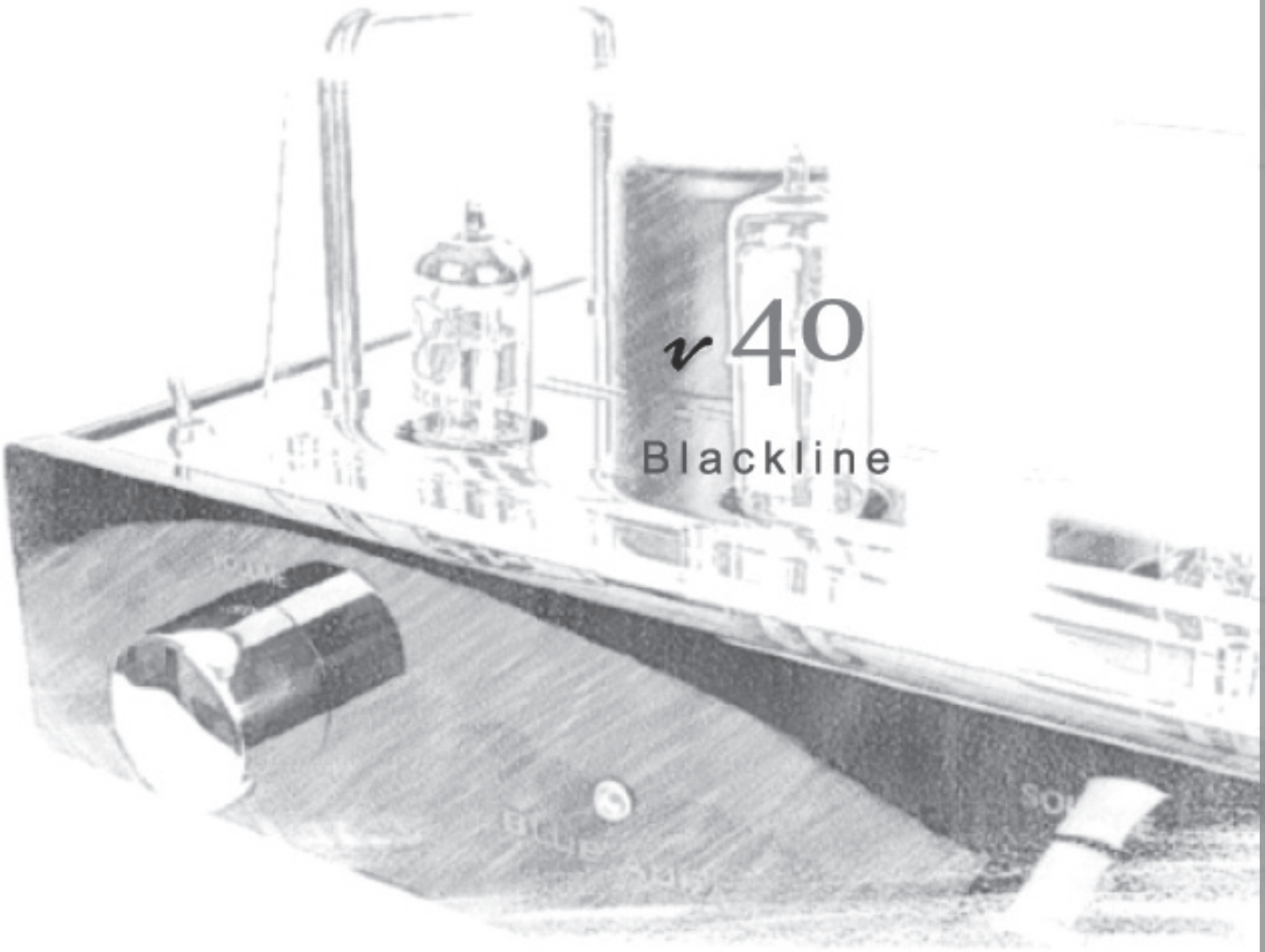

v40

Blackline

We hope you enjoy this product as much as we have enjoyed developing it.
Please unpack the products carefully and take a moment to read the instructions.

Contents

- v40 vacuum tube stereo amplifier

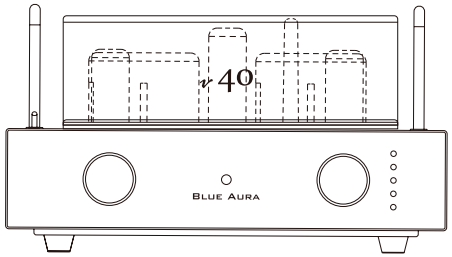

• 1 x Amplifier

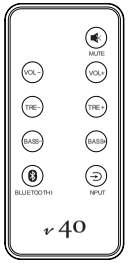

• 1 x Remote control

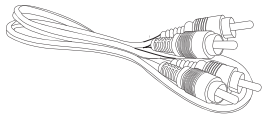

• 1 x Line out RCA cable

• 1 x Line out USB cable

• 1 x Line out 3.5mm cable

• 1 x Power Cord

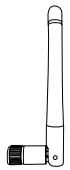

• 1 x Antenna

• 1 x Cloth

Please read the following precautions before attempting to operate the v40 amplifier

All safety and operating instructions should be read thoroughly before attempting to operate this equipment

- Retain Instructions for future reference
- Follow all of the instructions detailed in this manual
- Observe all safety warnings stated in this manual
- This unit should NOT be situated in close proximity to water.
- Avoid placement near bathtubs, sinks, washing machines, etc.
- Avoid exposure to direct sunlight or to extremes of temperature or humidity
- Do not place near direct heat sources such as radiators, stoves, gas fires, naked flames or candles.

- Ensure that the unit is placed on a clean, dry and flat surface before operation
- Do not drop the unit, apply excessive force to the controls or place heavy objects on top of the unit.
- Do not allow excessive levels of dust to gather on the $v40$.
- To clean, use a soft dry cloth. If necessary, use a damp cloth without any solvents
- Ensure that the area in which the unit is situated has adequate ventilation.
- Do not place the $v40$ in a position where its ventilation may become obstructed.
- Avoid placement on beds, sofas, rugs, enclosed bookcases/ cabinets and any other area which may cause interference to the ventilation of the product thus causing it to overheat
- Ensure that the unit is connected to the correct power supply as indicated on the unit.
- Unplug the $v40$ when not in use for a long period.
- Always make sure power cables are placed safely and are not obstructing a walkway
- This product can get hot. Do not touch the tubes and keep away from babies and children
- To avoid risk of electric shock, do not attempt to remove the cover or the baseplate of the unit. There are no user serviceable parts inside.
- When this product is moved from a cool to a warm place, condensation may occur on the surface of the vacuum tubes. In this instance, allow at least 1hour before attempting to operate the unit. This will avoid leakage or blowout of the vacuum tubes due to sudden heat
- Allow unit to cool completely before cleaning
- Do not attempt to clean the product with chemical solvents as this may damage the finish of the $v40$

- The v40 should be serviced by an authorised service engineer in the event of any of the following circumstances

1. The power supply or cord sustains damage
2. The unit is struck by a falling object
3. The unit is exposed to rain or moisture
4. Liquid is inadvertently spilt on the unit
5. The unit does not seem to operate normally or exhibits a sudden change in performance
6. The unit has been dropped
7. Any unauthorised changes or modifications to this equipment would render the manufacturer's Warranty null and void

ATTENTION:
To avoid damaging the vacuum tubes, the v40 should only be re-started 5 minutes after switching off.

WARNING:
Be aware of the high voltage area around the vacuumed tubes

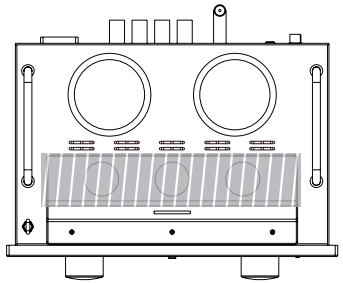

Front Of v40

Power Switch:

On: Power on
Off: Power off

Volume Knob:

Increase volume level by rotating the volume knob clockwise.
Reduce volume level by rotating the volume knob anti-clockwise

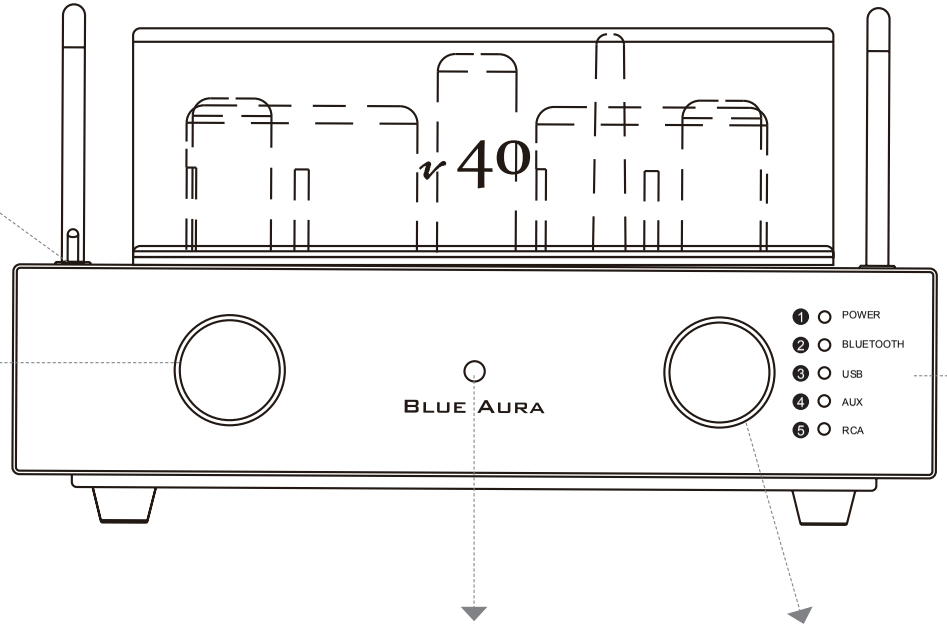

LED indicator

❶	RED	POWER On / Start Up
❷	BLUE	BLUETOOTH Input BLUETOOTH Pairing
❸	BLUE	USB Input
❹	BLUE	AUX Input
❺	BLUE	RCA Input

IR Receiver

Input Knob:

Select SOURCE DEVICE by rotating the knob clockwise or anti-clockwise

Bluetooth Pairing

Step 1

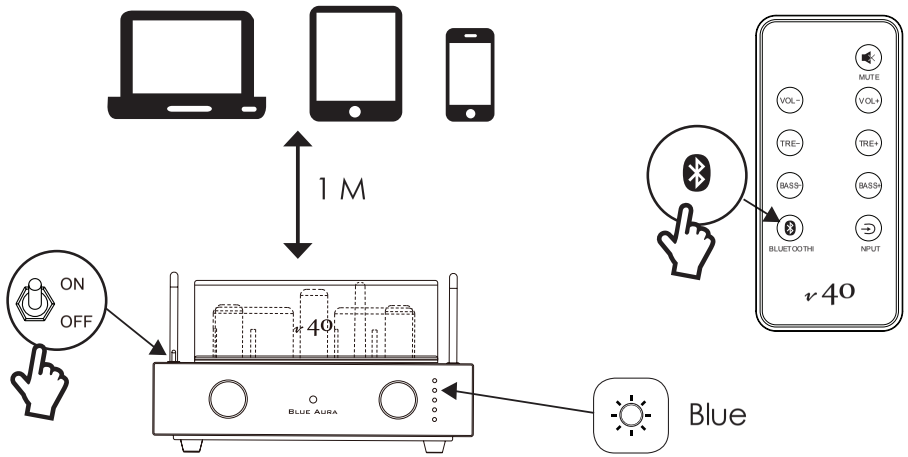

Step 2

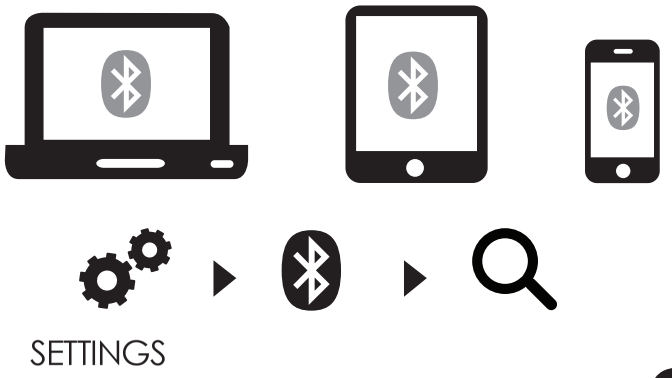

SETTINGS

Step 3

Step 4

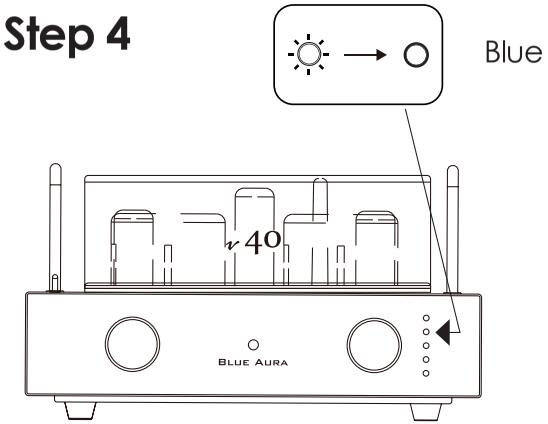

www.blueaura/information

Bluetooth®

v40 Connections

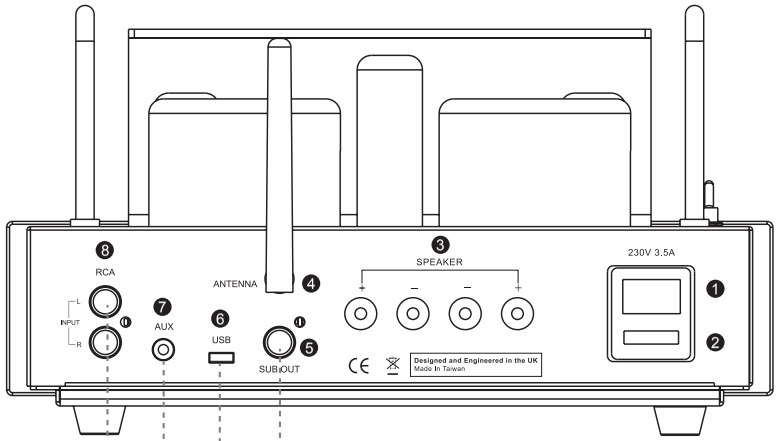

Back Panel: I/O

1. AC Power
2. Fuse
3. Speaker outputs
4. Bluetooth Antenna
5. SUB output
6. USB input
7. 3.5mm phone jack input
8. RCA input

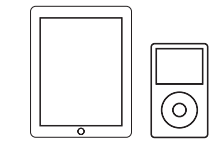

Cd / MP3 / Smartphone / Tablet

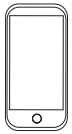

Android devices (OTG)

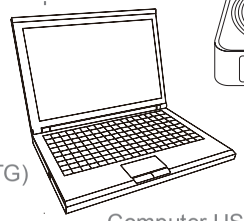

Computer USB

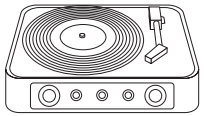

Turntable
(Phono stage
may be required)

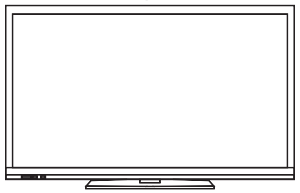

TV Line out cable
- (RCA – mini jack)

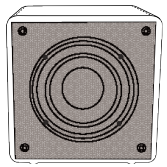

x SUB

All source with Bluetooth

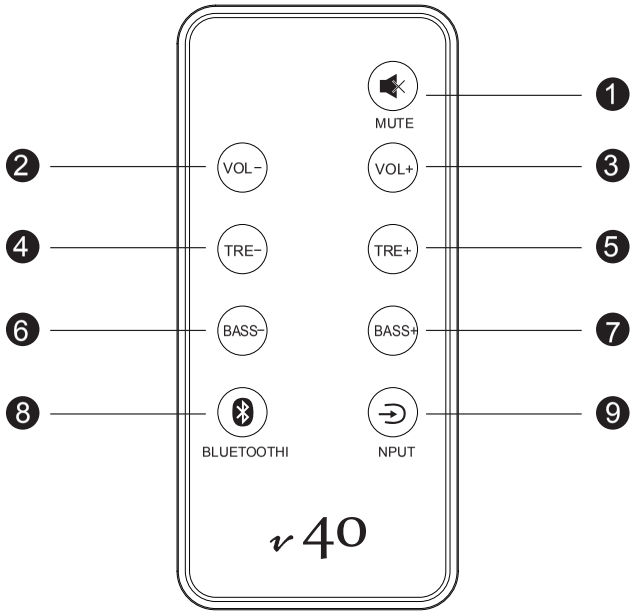

1. MUTE
2. VOL −
3. VOL +
4. TREBLE −
5. TREBLE +
6. BASS −
7. BASS +
8. BLUETOOTH
9. INPUT

* Treble and Bass has a +3 / - 3 step adjustment

VOLUME CONTROL

Increase volume by pressing VOL+
Decrease volume by pressing VOL-
Maximum / Minimum Value > Power LED FLASH 3 Times.
Mute volume by pressing MUTE > Power LED steady FLASH

TREBLE AND BASS CONTROL

Increase Treble by pressing TRE+
Decrease Treble by pressing TRE-
Increase Bass by pressing BASS+
Decrease Bass by pressing BASS-
Maximum / Minimum Treble and Bass > Power LED Flash twice.
Treble and Bass has a +3 / - 3 step adjustment and returns to default when the amplifier is powered off.

INPUT

Select SOURCE DEVICE by using the INPUT button (9) on the remote control

BLUETOOTH CONNECTION

Briefly press the Bluetooth button (8) The LED flashes Blue and enters pairing mode.

RESET

Hold “Mute Button” For 2 Seconds and release
An audible beep will confirm Reset
(Default volume setting and erase all BT devices in memory)

How to connect

Amplifier

Before attempting to make any connections to or from the v40, firstly ensure that the amplifier and all connecting devices are switched OFF.
When making connections to other devices from the v40, take the time to ensure that they are correct, for instance, (L) Left to (L) left, and (R) right to (R) right.
Always turn the power switch to the OFF position when making connections or disconnecting the v40.
When using the USB plug to connect to a PC or Laptop the software will automatically install.
A message window or beep will confirm successful installation.
Do not switch on the v40 until after you have connected the AC power lead

Loudspeakers

Connecting loudspeakers to the v40.

Please note that if the speaker cables are not connected properly you may hear no sound, or if the polarities are reversed, you will hear oddities in the signal path with an unnatural loss of bass frequencies.
Make sure the terminals on the rear of the v40 are firmly screwed in to prevent wires from becoming loose. If wires touch each other, the speakers and/or the v40 could be damaged.

Subwoofer

When using a subwoofer with the v40, allow the amplifier to warm up for at least 20 seconds before playing music.

Troubleshooting

If your v40 system fails to operate normally, please check the following points to determine if the fault can be corrected with one of the suggestions below.
If you feel your system is still faulty after reading this, please contact your authorised dealer or Service centre or email support@blueaura.co.uk

Troubleshooting

No Power	*Power adaptor is not connected properly* *Mains supply is off* *If using Remote, battery needs replacing*	*Make sure power adapter is firmly plugged in.* *Test with another appliance /different socket.* *Replace battery* *Replace mains fuse - a spare fuse is located in the fuse drawer directly below the mains input socket.*
No sound from speakers	*Volume control is turned down* *Speaker cables not connected* *Source selection incorrect*	*Check volume control on front of v40 and volume control on remote control* *Check connections on rear of v40 and speakers* *Check Source selection*
Remote control not working	*Low or dead battery* *Remote not being pointed in the correct direction, or within range*	*Replace battery* *Point the remote control in the direction of the v40 within 20ft (6.1M)*
Distorted sound	*Volume level is set too high* *Source device sound level is set too high*	*Decrease volume of v40* *Decrease output level of source device*
Acoustic image has insufficient low range tonal quality	*The speakers have not been wired correctly and are "out of phase" with each other*	*Ensure that the red (+) and black (-) wires have been correctly connected at the speakers and v40.*
Radio interference	*Equipment is situated too close to a radio*	*Move the speakers or amplifier away from the radio.*
All LED steady in BLUE	*The v40 has entered protection mode*	*Turn off the amplifier for 5 mins*

Specifications & Features

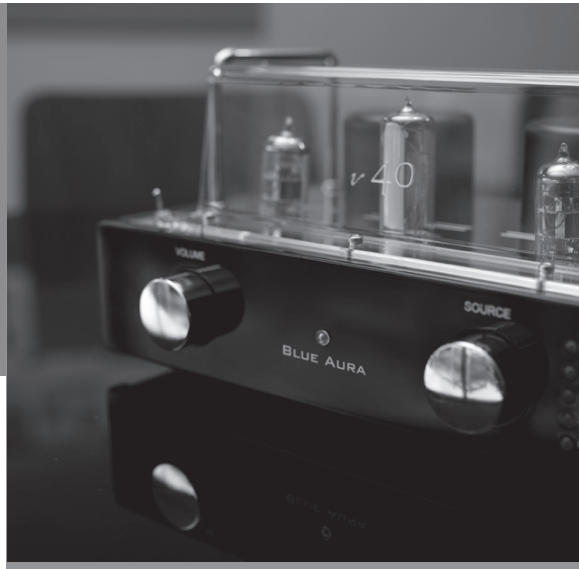

Amplifier

Power Output	30W per channel
Freq. Response.	23Hz – 100 KHz +/- 2dB
Harmonic Distortion	30W /0.7% , 1W /0.18%
Signal To Noise Ratio	88dB ‘A’-weighted / 66 dB FLAT
Input Impedance	50K Ω
Input Sensitivity	580mV +/- 5% @30W
Output Impedance	4 / 8 Ω
Vacuum Tube Type	12AU7 x 2 6e2 x 1
Audio Inputs	BLUETOOTH/RCA/Micro USB/3.5mm mini jack
Audio Outputs	Sub out (20Hz~850Hz)
Power Supply	AC 230V/50Hz
	AC 115V/60Hz
Dimensions:	H: 148mm W: 264mm D: 215 mm
Weight	3.5Kg

Blue Aura Worldwide Guarantee

This entitles you to have the unit repaired free of charge, during the first year after purchase, at any authorised Blue Aura distributor provided that it was originally purchased from an authorised Blue Aura dealer or distributor. The manufacturer can take no responsibility for defects arising from accident, misuse, abuse, wear and tear, neglect or through unauthorised adjustment and/or repair; neither can they accept responsibility for damage or loss occurring during transit to or from the person claiming under the guarantee.

The warranty covers: Parts and labour costs for first year from the purchase date. After one years you must pay for both parts and labour costs, the warranty does not cover transportation costs at any time.

Claims under guarantee:

This equipment should be packed in the original packing and returned to the dealer from whom it was purchased, or failing this, directly to the Blue Aura distributor in the country of residence. It should be sent carriage prepaid by a reputable carrier. No responsibility can be accepted for the unit whilst in transit to the dealer or distributor and customers are therefore advised to insure the unit against loss or damage whilst in transit.

All Blue Aura products undergo exhaustive tests and inspections both before and during manufacture to ensure we deliver products of the highest quality. However, for complete peace of mind please register your product within 30 days to take advantage of our extended 12 month guarantee.
Please register your product on line at http://www.blueaura.co.uk/register

Thank you for purchasing our product.

Please visit our website to get more information.

BLUE AURA

www.blueaura.co.uk
Telephone +44 (0) 1480 477738
Email info@blueaura.co.uk

v40man_v01